ONCAM

C-08 & C-12 Indoor / Outdoor

FISHEYE CAMERAS

Robust, Adaptable, and Directionally Discreet.

Oncam fisheye cameras are built for environments where complete visibility is essential. They offer industry-leading resolution and full-scene coverage with zero blind spots, significantly reducing the required camera count. These compact units provide panoramic awareness for monitoring everything from large campuses and warehouses to smaller lobbies and retail floors. Their robust design and edge-first architecture make them a powerful tool for scalable surveillance.

C-08 INDOOR:

Image Senor: 8MP (approx.), CMOS sensor
Field of View: 180° Horizontal, 180° Vertical

C-08 OUTDOOR:

Resolution: 8MP (approx.), CMOS sensor
Field of View: 180° Horizontal, 180° Vertical

C-12 INDOOR:

Image Senor: 12.4MP (approx.), CMOS sensor
Field of View: 180° Horizontal, 180° Vertical

C-12 OUTDOOR

Image Senor: 12.4MP (approx.), CMOS sensor
Field of View: 180° Horizontal, 180° Vertical

STANDARD FEATURES

- ONVIF G/M/S/T Conformant
- Oncam AI Onboard Analytics
- Micro SD Card Slot
- PoE, PoE+ and USB-C Power
- NDAA, TAA, IK10, IP69K Protection
- 5-Year Warranty*
- TrueDetail HDR
- Wi-Fi / Bluetooth Connectivity
- True Day/Night Advanced IR LEDs
- StreamLite+ Video Compression
- 3D Noise Reduction for Enhanced Clarity
- Direct Camera-to-Cloud (Plug and Play)
- End-to-end Encryption with Signed Certification
- Advanced Low Light Technology

Qualcomm Dragonwing

SANDISK™

ONVIF® | GMST

NDAA & TAA Compliant

* Free extension with Oncam Core License

GENERAL

Camera	C-08 INDOOR	C-08 OUTDOOR	C-12 INDOOR	C-12 OUTDOOR
Part Codes	**C08-IEC1-O**	**C08-OPC1-O**	**C12-IEC1-O**	**C12-OPC1-O**
Field of View	180° Horizontal, 180° Vertical	180° Horizontal, 180° Vertical	180° Horizontal, 180° Vertical	180° Horizontal, 180° Vertical
Image Sensor	8MP (approx.), CMOS sensor	8MP (approx.) CMOS sensor	12.4MP (approx.) CMOS sensor	12.4MP (approx.) CMOS sensor
Lens	180°, 1.6mm, F 2.0, all-glass, fixed focus, fixed iris, fisheye	180°, 1.6mm, F 2.0, all-glass, fixed focus, fixed Iris, fisheye	180°, 1.6mm, F 2.0, all-glass, fixed focus, fixed iris, fisheye	180°, 1.6mm, F 2.0, all-glass, fixed focus, fixed iris, fisheye
Day/Night IR Cut Filter	Automatic, manual	Automatic, manual	Automatic, manual	Automatic, manual
Minimum Illumination	Color: 0.1 lux at 50 IRE F/2.0 Mono: 0.1 lux at 50 IRE F/2.1	Color: 0.1 lux at 50 IRE F/2.0 Mono: 0.1 lux at 50 IRE F/2.0	Color: 0.1 lux at 50 IRE F/2.0 Mono: 0.1 lux at 50 IRE F/2.1	Color: 0.1 lux at 50 IRE F/2.0 Mono: 0.1 lux at 50 IRE F/2.0
Video Motion Detection	16 configurable polygonal regions	16 configurable polygonal regions	16 configurable polygonal regions	16 configurable polygonal regions
Analytics	Motion Region Detector, Tampering, Loitering Object Detector, Line Crossing/Counting, Region Object Detector, Object Tracking Only, Region Object Occupancy	Motion Region Detector, Tampering, Loitering Object Detector, Line Crossing,/Counting, Region Object Detector, Object Tracking Only, Region Object Occupancy	Motion Region Detector, Tampering, Loitering Object Detector, Line Crossing,/Counting, Region Object Detector, Object Tracking Only, Region Object Occupancy	Motion Region Detector, Tampering, Loitering Object Detector, Line Crossing/Counting, Region Object Detector, Object Tracking Only, Region Object Occupancy
External Alarm	N/A	2x contact input 1x contact ouput	N/A	2x contact input, 1x contact ouput
External LED Control	N/A	2x contact output	N/A	2x contact output
Advanced Event Management	Configurable Triggers: Motion regions, Network message, Link down Configurable Actions: SMTP (snapshot), Local recording	Configurable Triggers: Motion regions, Network message, Link down Configurable Actions: SMTP (snapshot), Local recording	Configurable Triggers: Motion regions, Network message, Link down Configurable Actions: SMTP (snapshot), Local recording	Configurable Triggers: Motion regions, Network message, Link down Configurable Actions: SMTP (snapshot), Local recording
Light Sensor	N/A	IPv4, TCP/IP, UDP, HTTP, DHCP, DNS, NTP, SMTP, RTP, RTSP, RTCP, WEB RTC, HTTPS, WS-Discovery, TLS, ARP and SNMP v2c or V3	N/A	IPv4, TCP/IP, UDP, HTTP, DHCP, DNS, NTP, SMTP, RTP, RTSP, RTCP, WEB RTC, HTTPS, WS-Discovery, TLS, ARP and SNMP v2c or V3
Audio Input	N/A	Audio IN through screw terminal connections, G.711/AAC codec/OPUS	N/A	Audio IN through screw terminal connections, G.711/AAC codec/OPUS
Networking	IPv4, TCP/IP, UDP, HTTP, DHCP, DNS, NTP, SMTP, RTP, RTSP, RTCP, WEB RTC, HTTPS, WS-Discovery, TLS, ARP and SNMP v2c or V3	IPv4, TCP/IP, UDP, HTTP, DHCP, DNS, NTP, SMTP, RTP, RTSP, RTCP, WEB RTC, HTTPS, WS-Discovery, TLS, ARP and SNMP v2c or V3	IPv4, TCP/IP, UDP, HTTP, DHCP, DNS, NTP, SMTP, RTP, RTSP, RTCP, WEB RTC, HTTPS, WS-Discovery, TLS, ARP and SNMP v2c or V3	IPv4, TCP/IP, UDP, HTTP, DHCP, DNS, NTP, SMTP, RTP, RTSP, RTCP, WEB RTC, HTTPS, WS-Discovery, TLS, ARP and SNMP v2c or V3
SD Card	Built in MicroSD card slot (FAT32), minimum class 10 with AES256 File based encryption	Built in MicroSD card slot (FAT32), minimum class 10 with AES256 File based encryption	Built in MicroSD card slot (FAT32), minimum class 10 with AES256 File based encryption	Built in MicroSD card slot (FAT32), minimum class 10 with AES256 File based encryption

GENERAL

Camera	C-08 INDOOR	C-08 OUTDOOR	C-12 INDOOR	C-12 OUTDOOR
White Balance Range	Auto White Balance (Range = approx. 2,500 K - 8,000 K)	Auto White Balance (Range = approx. 2,500 K - 8,000 K)	Auto White Balance (Range = approx. 2,500 K - 8,000 K)	Auto White Balance (Range = approx. 2,500 K - 8,000 K)
Privacy	5 configurable privacy regions/masks	5 configurable privacy regions/masks	5 configurable privacy regions/masks	5 configurable privacy regions/masks
Security	Password protection, WS-Username token, RTSP authentication, HTTP Digest authentication, Authorization levels, Brute force protection, IP address filtering, User access log, Encrypted TLS 1.2, HTTPS encryption, IEEE 802.1x Authentication, EAP-MD5, EAP-TLS, EAP-PEAP	Password protection WS-Username token RTSP authentication HTTP Digest authentication Authorization levels Brute force protection IP address filtering User access log Encrypted TLS 1.2 HTTPS encryption IEEE 802.1x Authentication, EAP-MD5, EAP-TLS, EAP-PEAP	Password protection WS-Username token RTSP authentication HTTP Digest authentication Authorization levels Brute force protection IP address filtering User access log Encrypted TLS 1.2 HTTPS encryption IEEE 802.1x Authentication, EAP-MD5, EAP-TLS, EAP-PEAP	Password protection, WS-Username token, RTSP authentication, HTTP Digest authentication, Authorization levels, Brute force protection, IP address filtering, User access log, Encrypted TLS 1.2, HTTPS encryption, IEEE 802.1x Authentication, EAP-MD5, EAP-TLS, EAP-PEAP

VIDEO

Camera	C-08 INDOOR	C-08 OUTDOOR	C-12 INDOOR	C-12 OUTDOOR
Frame Rate	Max 60 fps at full resolution or 30 fps with TrueDetail HDR	Max 60 fps at full resolution or 30 fps with TrueDetail HDR	Max 55 fps at full resolution or 30 fps with TrueDetail HDR	Max 55fps at full resolution or 25 fps with TrueDetail HDR
Video Compression	H.264, H.265, MJPEG and VP8 (WEB RTC)	H.264, H.265, MJPEG and VP8 (WEB RTC)	H.264, H.265, MJPEG and VP8 (WEB RTC)	H.264, H.265, MJPEG and VP8 (WEB RTC)
Smart Compression	StreamLite H.264 and H.265 StreamLite+ H.264 and H.265 (with ColorMap compression)	StreamLite H.264 and H.265 StreamLite+ H.264 and H.265 (with ColorMap compression)	StreamLite H.264 and H.265 StreamLite+ H.264 and H.265 (with ColorMap compression)	StreamLite H.264 and H.265 StreamLite+ H.264 and H.265 (with ColorMap compression)
Fisheye Stream 1 (Primary - 360° Fisheye Stream H.264/H.265)	Up to 60 fps 2160 x 2160 (4.7MP, max resolution) 30 fps when multi-streaming 1920 x 1920 (3.7MP) 1440 x 1440 (2.1MP) 992 x 992 (0.98MP) 512 x 512 (0.26MP)	Up to 60 fps: 2160 x 2160 (4.7MP, max resolution) 30 fps when multi-streaming2 1920 x 1920 (3.7MP) 1440 x 1440 (2.1MP) 992 x 992 (0.98MP) 512 x 512 (0.26MP)	Up to 55 fps1: 2992 x 2992 (9.0MP, max resolution) 30 fps when multi-streaming2 Up to 60 fps1: 2800 x 2800 (7.8MP) 2304 x 2304 (5.3MP) 1920 x 1920 (3.7MP) 1440 x 1440 (2.1MP) 992 x 992 (0.98MP) 512 x 512 (0.26MP)	Up to 55 fps 2992 x 2992 (9.0 MP, max resolution) 30 fps when multi-streaming Up to 60 fps: 2800 x 2800 (7.8MP) 2304 x 2304 (5.3 MP) 1920 x 1920 (3.7MP) 1440 x 1440 (2.1MP) 992 x 992 (0.98MP) 512 x 512 (0.26MP)
Stream 2 (Secondary - 360° Fisheye Stream H.264/H.265)	Up to 15 fps 2160 x 2160 (4.7MP, max resolution) 1920 x 1920 (3.7MP) 1440 x 1440 (2.1MP) 992 x 992 (0.98MP) 512 x 512 (0.26MP)	Up to 15 fps: 2160 x 2160 (4.7MP, max resolution) 1920 x 1920 (3.7MP) 1440 x 1440 (2.1MP) 992 x 992 (0.98MP) 512 x 512 (0.26MP)	Up to 15 fps: 2992 x 2992 (9.0MP, max resolution) 2800 x 2800 (7.8MP) 2304 x 2304 (5.3MP) 1920 x 1920 (3.7MP) 1440 x 1440 (2.1MP) 992 x 992 (0.98MP) 512 x 512 (0.26MP)	Up to 15 fps: 2992 x 2992 (9.0MP, max resolution) 2800 x 2800 (7.8MP) 2304 x 2304 (5.3MP) 1920 x 1920 (3.7MP) 1440 x 1440 (2.1MP) 992 x 992 (0.98MP) 512 x 512 (0.26MP)

VIDEO

Camera	C-08 INDOOR	C-08 OUTDOOR	C-12 INDOOR	C-12 OUTDOOR
Stream 3 (Tertiary - 360° Fisheye Stream H.264/H.265)	Up to 30 fps: 1440 x 1440 (2.1MP, max resolution) 992 x 992 (0.98MP) 512 x 512 (0.26MP)	Up to 30 fps: 1440 x 1440 (2.1MP, max resolution) 992 x 992 (0.98MP) 512 x 512 (0.26MP)	Up to 30 fps: 1920 x 1920 (3.7MP, max resolution) 1440 x 1440 (2.1MP) 992 x 992 (0.98MP) 512 x 512 (0.26MP)	Up to 30 fps: 1920 x 1920 (3.7MP, max resolution) 1440 x 1440 (2.1MP) 992 x 992 (0.98MP) 512 x 512 (0.26MP)
Stream 4 (Low resolution - 360° Fisheye Stream H.264/H.265/MJPEG)	Up to 10 fps: 512 x 512 (0.26MP max resolution)	Up to 10 fps: 512 x 512 (0.26MP max resolution)	Up to 10 fps: 512 x 512 (0.26MP max resolution)	Up to 10 fps: 512 x 512 (0.26MP max resolution)
Camera Modes	Fisheye only, Panoramic+ only, Multi-Mode	Fisheye only, Panoramic+ only, Multi-Mode	Fisheye only, Panoramic+ only, Multi-Mode	Fisheye only, Panoramic+ only, Multi-Mode
Multi-Stream Capacity	4 multiple streams can run concurrently. Primary stream maintains a frame rate of 30 fps	4 multiple streams can run concurrently. Primary stream maintains a frame rate of 30 fps	5 multiple streams can run concurrently. Primary stream maintains a frame rate of 30 fps	4 multiple streams can run concurrently. Primary stream maintains a frame rate of 30 fps
Dewarped Views	Panoramic+ (180° view): 2160 x 864 to 800 x 320 Corridor+ (ceiling split corridor view): 1728 x 1080 to 640 x 400 T Corridor+ (three-way split corridor view): 2592 x 1080 to 768 x 320 VCam (up to 4): 1280 x 720 to 576 x 432	Panoramic+ (180° view): 2160 x 864 to 800 x 320 Corridor+ (ceiling split corridor view): 1728 x 1080 to 640 x 400 T Corridor+ (three-way split corridor view): 2592 x 1080 to 768 x 320 VCam (up to 4): 1280 x 720 to 576 x 432	Panoramic+ (180° view): 3040 x 1216 to 800 x 320 Corridor+ (ceiling split corridor view): 2432 x 1520 to 640 x 400 T Corridor+ (three-way split corridor view): 3456 x 1440 to 768 x 320 VCam (up to 4): 1280 x 720 to 576 x 432	Panoramic+ (180° view): 3040 x 1216 to 800 x 320 Corridor+ (ceiling split corridor view): 2432 x 1520 to 640 x 400 T Corridor+ (three-way split corridor view): 3456 x 1440 to 768 x 320 VCam (up to 4): 1280 x 720 to 576 x 432
Image Settings	Brightness, contrast, saturation, sharpness, exposure compensation, exposure priority, imaging preference, text overlay, 180° rotate, multiple color spaces	Brightness, contrast, saturation, sharpness, exposure compensation, exposure priority, imaging preference, text overlay, 180° rotate, multiple color spaces	Brightness, contrast, saturation, sharpness, exposure compensation, exposure priority, imaging preference, text overlay, 180° rotate, multiple color spaces	Brightness, contrast, saturation, sharpness, exposure compensation, exposure priority, imaging preference, text overlay, 180° rotate, multiple color spaces
Image Enhancement	TrueDetail HDR up to 30 fps. TrueDetail HDR maximum dynamic range 120dB, Wide Dynamic Range image adjustment	TrueDetail HDR up to 30 fps. TrueDetail HDR maximum dynamic range 120dB, Wide Dynamic Range image adjustment	TrueDetail HDR up to 25 fps. TrueDetail HDR maximum dynamic range 120dB, Wide Dynamic Range image adjustment	TrueDetail HDR up to 25 fps. TrueDetail HDR maximum dynamic range 120dB
PTZ Functionality	10x zoom with Oncam 3D client-side dewarping software	10x zoom with Oncam 3D client-side dewarping software	10x zoom with Oncam 3D client-side dewarping software	10x zoom with Oncam 3D client-side dewarping software
VMS / NVR Support	ONVIF Profile G, M, S, T conformant VMS/NVR compatibility	ONVIF Profile G, M, S, T conformant. Contact Oncam for the up-to-date VMS compatibility list	ONVIF Profile G, M, S, T conformant. Contact Oncam for the up-to-date VMS compatibility list	ONVIF Profile G, M, S, T conformant VMS/NVR compatibility
Web Browser Compat-ibility	Supported browsers: Chrome, Firefox, Edge and Safari	Supported browsers: Chrome, Firefox, Edge and Safari	Supported browsers: Chrome, Firefox, Edge and Safari	Supported browsers: Chrome, Firefox, Edge and Safari
Unicast	Up to 20 simultaneous users depending on the resolution settings	Up to 20 simultaneous users depending on the resolution settings	Up to 20 simultaneous users depending on the resolution settings	Up to 20 simultaneous users depending on the resolution settings
Multicast	Supported for all streams (Video and Metadata)	Supported for all streams (Video and Metadata)	Supported for all streams (Video and Metadata)	Supported for all streams (Video and Metadata)
Bit Rate Control	Fixed Quality (Capped Bitrate) or Constant Bit Rate	Fixed Quality (Capped Bitrate) or Constant Bit Rate	Fixed Quality (Capped Bitrate) or Constant Bit Rate	Fixed Quality (Capped Bitrate) or Constant Bit Rate

ELECTRICAL

Camera	C-08 INDOOR	C-08 OUTDOOR	C-12 INDOOR	C-12 OUTDOOR
Ports	RJ45 for 100/1000BASE-Tx	RJ45 for 100/1000BASE-Tx	RJ45 for 100/1000BASE-Tx	RJ45 for 100/1000BASE-Tx
Power Input	PoE, IEEE standard 802.3af	PoE, IEEE standard 802.3af. Screw Terminals, 8-28 VDC, 15W LPS, NEC Class 2 power supply.	PoE, IEEE standard 802.3af. Screw Terminals, 8-28 VDC, 15W LPS, NEC Class 2 power supply.	PoE, IEEE standard 802.3af. Screw Terminals, 8-28 VDC, 15W LPS, NEC Class 2 power supply
Power Consumption (Maximum)	> 12.95W (IEEE 802.3af, PoE 48VDC)	< 12.95W (IEEE 802.3af, PoE 48VDC) < 12.95W (DC 8-28VDC)	< 12.95W (IEEE 802.3af, PoE 48VDC) < 12.95W (DC 8-28VDC)	> 12.95W (IEEE 802.3af, PoE 48VDC) > 12.95W (DC 8-28VDC)

ENVIRONMENTAL

Camera	C-08 INDOOR	C-08 OUTDOOR	C-12 INDOOR	C-12 OUTDOOR
Operating Temperature Range	0 to +50° C (32 to +122° F)	-40° C to +55° C (-40 to +131° F)	0 to +50° C (32 to +122° F)	-40° C to +55° C (-40 to +131° F)
Cold Start Temperature	N/A	-20° C to +55° C (-4 to +131° F)	N/A	-20° C to +55° C (-4 to +131° F)
Cold Start Temperature Range with Optional Heater	N/A	-40° C to +55° C (-40 to +131° F)	N/A	-40° C to +55° C (-40 to +131° F)
Operating Humidity	N/A	Up to 95% Relative Humidity non-condensing	N/A	Up to 95% Relative Humidity non-condensing
Ingress Protection	IP40	IP66, IP67, IP68 and IP69K NEMA Type 4 & 6	IP40	IP66, IP67, IP68 and IP69K NEMA Type 4 & 6
Impact Resistance	N/A	IK10	N/A	IK10

MECHANICAL

Camera	C-08 INDOOR	C-08 OUTDOOR	C-12 INDOOR	C-12 OUTDOOR
Camera Mount	Surface, Pendant, Recessed and Panoramic+ Tilt	Surface , Pendant and Panoramic+ Tilt	Surface, Pendant , Recessed and Panoramic+ Tilt	Surface, Pendant , Recessed and Panoramic+ Tilt
Weight	0.308kg (0.68 lbs)	1.00 kg (2.20 lbs)	0.308kg (0.68 lbs)	1.00 kg (2.20 lbs)
Dimensions	92 x 92 x 51 mm (3.6 x 3.6 x 2.0 in.)	150 x 150 x 88 mm (5.9 x 5.9 x 3.4 in)	92 x 92 x 51 mm (3.6 x 3.6 x 2.0 in.)	150 x 150 x 88 mm (5.9 x 5.9 x 3.4 in)

CERTIFICATIONS

Camera	C-08 INDOOR	C-08 OUTDOOR	C-12 INDOOR	C-12 OUTDOOR
	IEEE802.3af AS/NZS CISPR 32: 2015 AMD 1: 2020 CE: EN 55032:2015/ A1:2020, Class B; EN 55035:2017/A11:2020; EN50130-4:2011/A1:2014 UKCA: BS EN 55032:2015 +A1:2020, Class B; BS EN 55035:2017 +A11:2020; BS EN50130-4:2011 +A1:2014 EN IEC 61000-6-3:2021 FCC CFR Title 47 Part 15 Subpart B: 2020 Class B ICES-003 Issue 7:2020, Class B ANSI C63.4-2014,ANSI C63.4a-2017, CAN/CSA-CISPR 32:17 UL/cUL 62368-1, EN 62368-1:2014/A11:2017 RoHS REACH IP40 5 year warranty	IEEE802.3af AS/NZS CISPR 32: 2015 AMD 1: 2020 CE UKCA EN 55032:2015/A1:2020, Class B EN 55035:2017/A11:2020 EN50130-4:2011/A1:2014 BS EN 55032:2015 +A1:2020, Class B BS EN 55035:2017 +A11:2020 BS EN50130-4:2011 +A1:2014 EN IEC 61000-6-3:2021 EN 45545-2: 2020 EN 50155: 2017 EN 50121-1: 2017 EN 50121-3-2: 2016/A1: 2019 EN 50121-4: 2016/A1: 2019 7 FCC CFR Title 47 Part 15 Subpart B: 2020 Class B ICES-003 Issue 7:2020, Class B ANSI C63.4-2014,ANSI C63.4a-2017, CAN/CSA-CISPR 32:17 UL/cUL 62368-1, EN 62368-1:2014/A11:2017 RoHS REACH IP66, IP67, IP68, IP69K and IK10 NEMA Type 4 & 6	IEEE802.3af AS/NZS CISPR 32: 2015 AMD 1: 2020 CE UKCA EN 55032:2015/A1:2020, Class B EN 55035:2017/A11:2020 EN50130-4:2011/A1:2014 BS EN 55032:2015 +A1:2020, Class B BS EN 55035:2017 +A11:2020 BS EN50130-4:2011 +A1:2014 EN IEC 61000-6-3:2021 FCC CFR Title 47 Part 15 Subpart B: 2020 Class B ICES-003 Issue 7:2020, Class B ANSI C63.4-2014,ANSI C63.4a-2017, CAN/CSA-CISPR 32:17 UL/cUL 62368-1, EN 62368-1:2014/A11:2017 RoHS REACH IP40	IEEE802.3af AS/NZS CISPR 32: 2015 AMD 1: 2020 CE: EN 55032:2015/ A1:2020, Class B; EN 55035:2017/A11:2020; EN50130-4:2011/A1:2014 UKCA: BS EN 55032:2015 +A1:2020, Class B; BS EN 55035:2017 +A11:2020; BS EN50130-4:2011 +A1:2014 EN IEC 61000-6-3:2021 EN 45545-2: 2020EN 50155: 2017 EN 50121-1: 2017 EN 50121-3-2: 2016/A1: 2019 EN 50121-4: 2016/A1: 2019 FCC CFR Title 47 Part 15, Subpart B: 2020 Class B ICES-003 Issue 7:2020, Class B ANSI C63.4-2014,ANSI C63.4a-2017, CAN/CSA-CISPR 32:17 UL/cUL 62368-1, EN 62368-1:2014/A11:2017 RoHS REACH IP66, IP67, IP68, IP69K and IK10 NEMA Type 4 & 6 5 year warranty

C-08 & C-12 INDOOR

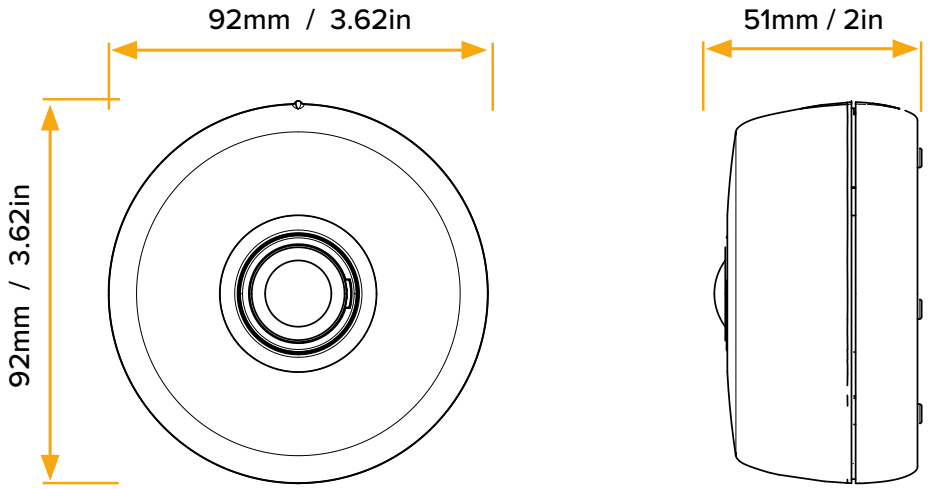

C-08 & C-12 OUTDOOR

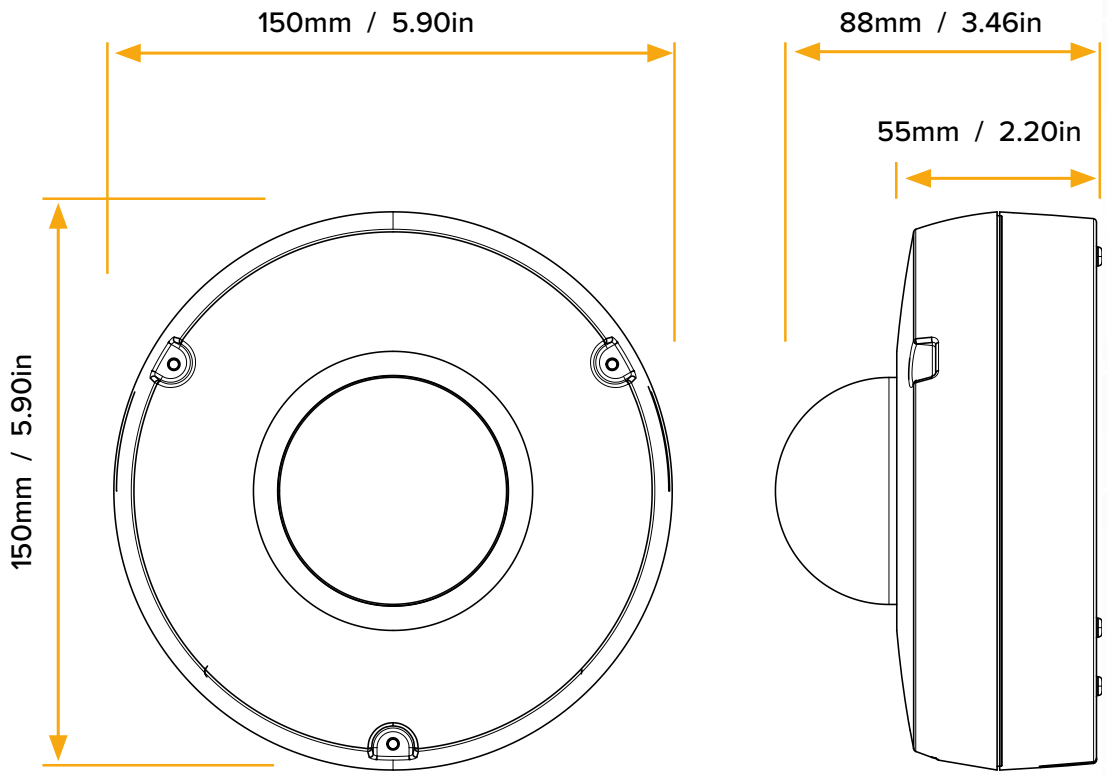

ONCAM

© Copyright 2026. Oncam | 6th Floor, 2 London Wall Place, London EC2Y 5AU, UK | oncam.net | info@oncam.net